SOUTHERN CALIFORNIA EDISON®
An EDISON INTERNATIONAL® Company

Distribution Costs Contribution in the Definition of TOU Periods

Tram Camba

Western Load Research Conference

Background

- 2015 General Rate Case (GRC) Phase 2
  - SCE acknowledged current Time Of Use (TOU) periods may be out-of-date
- Settlement Agreement in GRC
  - Obligates SCE to investigate new TOU periods in Rate Design Window application
- Duck Curve diagnosed as a generation issue
  - Extend scope to distribution

SCE System Overview

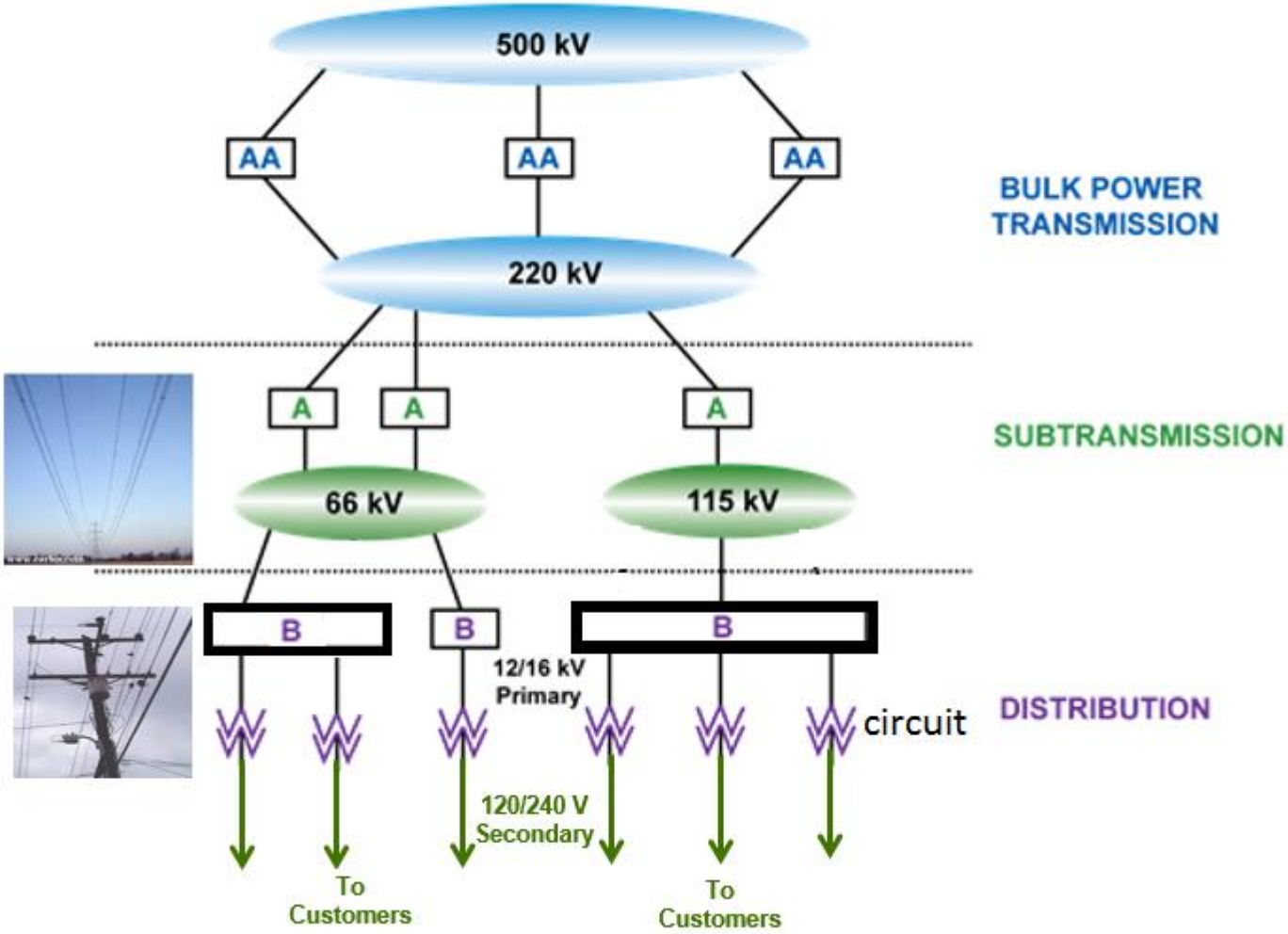

Substation upgrades are made using B-banks data

Circuit upgrades are made using circuit data

Data Sources

- B-banks and circuit data
  - Eight planning regions
  - Raw hourly data obtained from SCADA
  - Unit of measure: amps
- Circuits map to B-banks
  - Planning load limit (PLL)
  - Temperature Sensitivity

Methodology

- B-banks

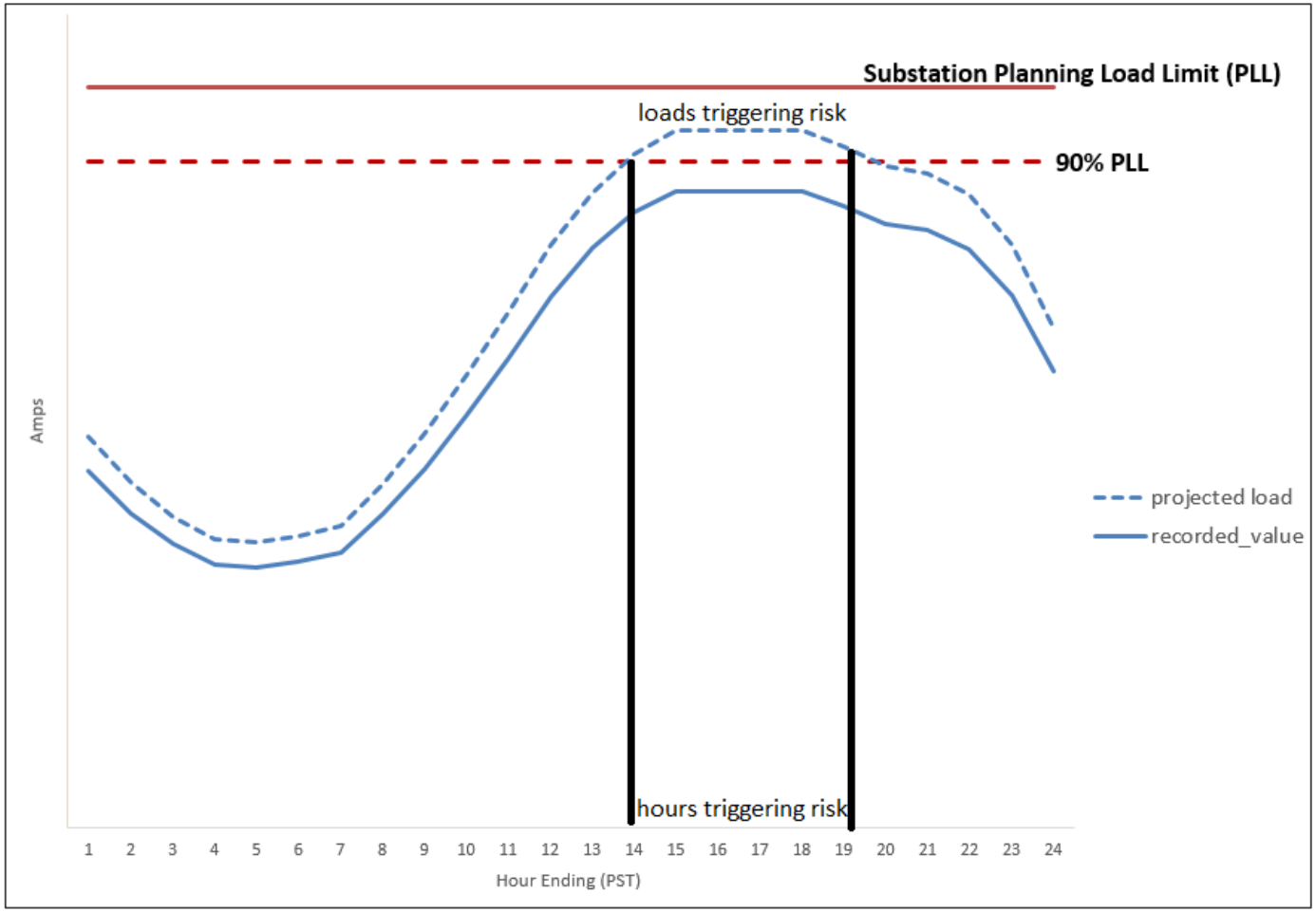

Methodology

- Circuits

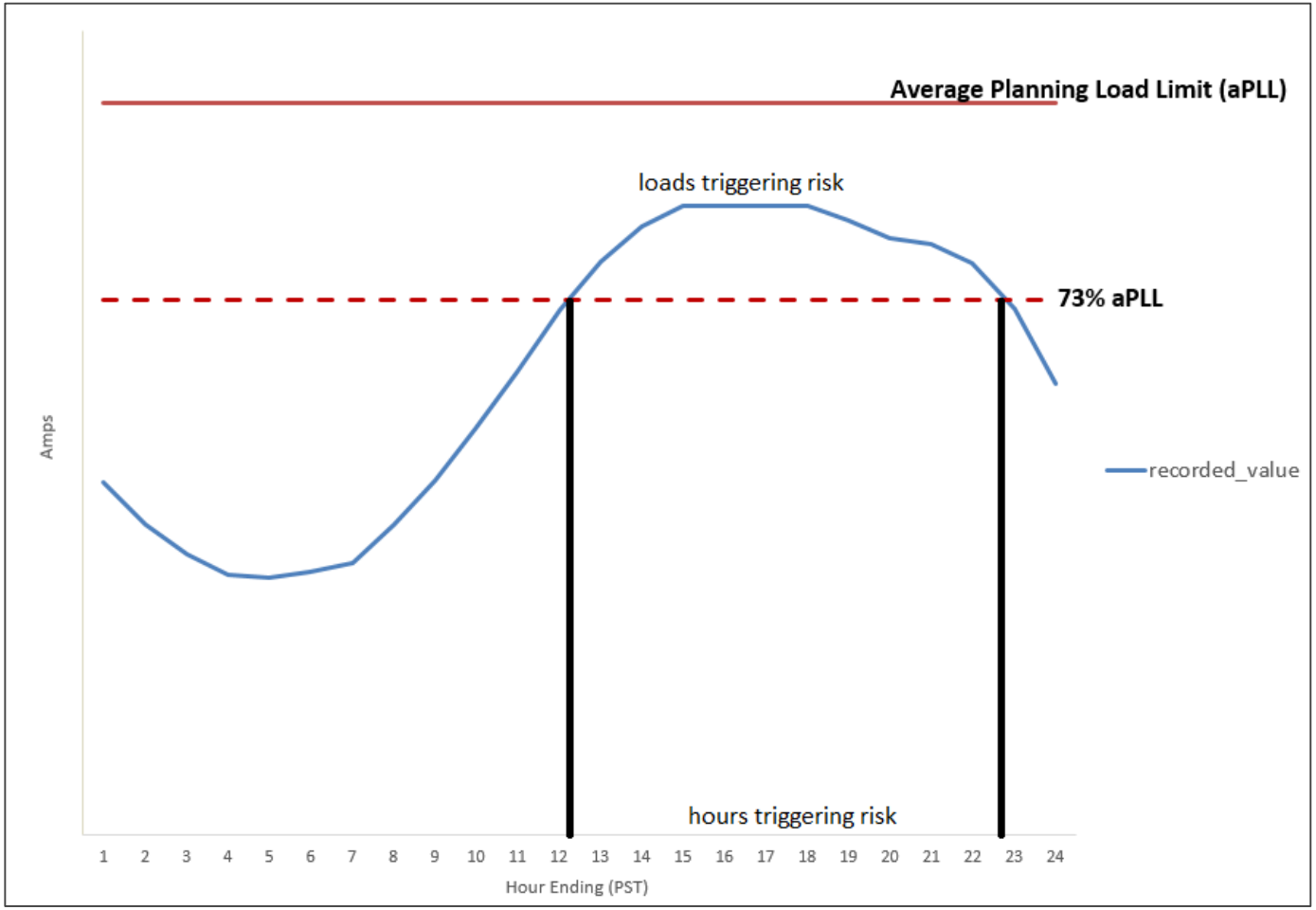

Example: B-bank data

substation	date	hour	PLL (amps)	recorded value	temperature adjusted load	90%PLL	flag	peak
Rosemead	9/15/2014	8	3644	1543	1691	3280	0	0
Rosemead	9/15/2014	9	3644	1766	1936	3280	0	0
Rosemead	9/15/2014	10	3644	2029	2224	3280	0	0
Rosemead	9/15/2014	11	3644	2307	2528	3280	0	0
Rosemead	9/15/2014	12	3644	2614	2865	3280	0	0
Rosemead	9/15/2014	13	3644	2853	3127	3280	0	0
Rosemead	9/15/2014	14	3644	3025	3315	3280	1	3025
Rosemead	9/15/2014	15	3644	3129	3429	3280	1	3129
Rosemead	9/15/2014	16	3644	3128	3428	3280	1	3128
Rosemead	9/15/2014	17	3644	3132	3433	3280	1	3132
Rosemead	9/15/2014	18	3644	3132	3433	3280	1	3132
Rosemead	9/15/2014	19	3644	3054	3347	3280	1	3054
Rosemead	9/15/2014	20	3644	2968	3253	3280	1	2968
Rosemead	9/15/2014	21	3644	2937	3219	3280	0	0
Rosemead	9/15/2014	22	3644	2844	3117	3280	0	0
Rosemead	9/15/2014	23	3644	2618	2869	3280	0	0
Rosemead	9/15/2014	24	3644	2243	2458	3280	0	0

Example: B-bank data

DATE	HOUR	MONTH	DAYTYPE	TOTAL BBANK CRITERIA ADJ LOAD > 90% PLL	PEAK RISK FACTOR
9/15/2014	8	9	1	494	0.005%
9/15/2014	9	9	1	2,649	0.029%
9/15/2014	10	9	1	9,160	0.101%
9/15/2014	11	9	1	19,347	0.213%
9/15/2014	12	9	1	31,521	0.347%
9/15/2014	13	9	1	45,899	0.505%
9/15/2014	14	9	1	70,806	0.779%
9/15/2014	15	9	1	82,256	0.905%
9/15/2014	16	9	1	115,910	1.275%
9/15/2014	17	9	1	107,340	1.181%
9/15/2014	18	9	1	63,686	0.701%
9/15/2014	19	9	1	62,450	0.687%
9/15/2014	20	9	1	32,358	0.356%
9/15/2014	21	9	1	21,770	0.240%
9/15/2014	22	9	1	8,150	0.090%
9/15/2014	23	9	1	2,443	0.027%
9/15/2014	24	9	1	1,542	0.017%

Quick Summary

- B-Banks

	Year		
	2012	2013	2014
Average No. of B-Banks	663	663	591
Average Load Per Hour (amps)	643	643	688
No. instances > 90% PLL	3,887	7,865	10,137
Total loads triggering risk (Million amps)	6.44	7.73	9.09

- Circuits

	Year		
	2012	2013	2014
Average No. of Circuits	3,035	3,286	3,399
Average Load Per Hour (amps)	142	135	137
No. instances > 73% aPLL	196,389	164,386	210,653
Total loads triggering risk (Million amps)	74.72	60.81	81.92

Results: Circuits

Row Labels	1	2	3	4	5	6	7	8	9	10	11	12	13	14	15	16	17	18	19	20	21	22	23	24	Grand Total
WEEKDAYS	0.72%	0.69%	0.70%	0.70%	0.81%	1.07%	1.57%	2.25%	2.95%	3.80%	4.44%	5.13%	6.16%	6.84%	7.23%	6.94%	6.02%	5.39%	5.14%	4.90%	3.67%	2.15%	1.29%	0.91%	81.48%
1	0.05%	0.04%	0.05%	0.04%	0.04%	0.04%	0.06%	0.10%	0.13%	0.16%	0.17%	0.17%	0.17%	0.17%	0.15%	0.13%	0.13%	0.22%	0.25%	0.23%	0.19%	0.12%	0.08%	0.06%	2.97%
2	0.04%	0.04%	0.04%	0.04%	0.04%	0.06%	0.07%	0.11%	0.13%	0.15%	0.16%	0.17%	0.17%	0.16%	0.15%	0.14%	0.11%	0.16%	0.21%	0.21%	0.17%	0.12%	0.08%	0.06%	2.79%
3	0.06%	0.06%	0.06%	0.06%	0.07%	0.10%	0.13%	0.18%	0.20%	0.23%	0.23%	0.25%	0.25%	0.22%	0.19%	0.16%	0.12%	0.14%	0.23%	0.24%	0.19%	0.12%	0.09%	0.08%	3.66%
4	0.07%	0.06%	0.06%	0.06%	0.07%	0.09%	0.12%	0.18%	0.22%	0.25%	0.28%	0.29%	0.32%	0.31%	0.30%	0.27%	0.21%	0.17%	0.23%	0.24%	0.18%	0.12%	0.09%	0.07%	4.27%
5	0.06%	0.05%	0.05%	0.05%	0.08%	0.10%	0.17%	0.24%	0.33%	0.43%	0.52%	0.60%	0.71%	0.80%	0.88%	0.87%	0.77%	0.61%	0.49%	0.52%	0.40%	0.21%	0.11%	0.07%	9.12%
6	0.07%	0.07%	0.07%	0.08%	0.08%	0.11%	0.16%	0.21%	0.24%	0.32%	0.34%	0.35%	0.41%	0.44%	0.45%	0.41%	0.34%	0.27%	0.25%	0.28%	0.25%	0.17%	0.12%	0.08%	5.57%
7	0.08%	0.08%	0.08%	0.08%	0.10%	0.13%	0.20%	0.29%	0.41%	0.56%	0.66%	0.80%	1.03%	1.25%	1.43%	1.49%	1.32%	1.06%	0.71%	0.64%	0.53%	0.31%	0.15%	0.10%	13.48%
8	0.07%	0.07%	0.07%	0.07%	0.08%	0.11%	0.17%	0.25%	0.35%	0.49%	0.57%	0.66%	0.83%	0.95%	1.08%	1.06%	0.88%	0.61%	0.45%	0.49%	0.35%	0.19%	0.12%	0.08%	10.05%
9	0.05%	0.05%	0.05%	0.05%	0.07%	0.10%	0.17%	0.28%	0.44%	0.64%	0.86%	1.14%	1.49%	1.76%	1.87%	1.79%	1.55%	1.24%	1.32%	1.17%	0.74%	0.33%	0.13%	0.07%	17.36%
10	0.06%	0.05%	0.06%	0.06%	0.07%	0.11%	0.14%	0.18%	0.22%	0.29%	0.34%	0.38%	0.45%	0.45%	0.44%	0.37%	0.30%	0.34%	0.37%	0.30%	0.19%	0.10%	0.08%	0.06%	5.42%
11	0.04%	0.04%	0.04%	0.04%	0.04%	0.05%	0.07%	0.10%	0.12%	0.13%	0.15%	0.15%	0.16%	0.17%	0.17%	0.13%	0.12%	0.17%	0.16%	0.13%	0.10%	0.08%	0.07%	0.06%	2.51%
12	0.07%	0.07%	0.06%	0.06%	0.06%	0.07%	0.10%	0.12%	0.15%	0.15%	0.17%	0.18%	0.15%	0.15%	0.14%	0.13%	0.18%	0.41%	0.47%	0.44%	0.38%	0.27%	0.17%	0.12%	4.28%
WEEKENDS	0.30%	0.29%	0.28%	0.26%	0.27%	0.28%	0.29%	0.32%	0.37%	0.42%	0.50%	0.70%	1.00%	1.38%	1.71%	1.84%	1.72%	1.51%	1.39%	1.32%	1.02%	0.65%	0.40%	0.30%	18.52%
1	0.02%	0.02%	0.02%	0.02%	0.02%	0.02%	0.02%	0.02%	0.03%	0.03%	0.03%	0.03%	0.02%	0.03%	0.03%	0.03%	0.04%	0.06%	0.08%	0.07%	0.05%	0.04%	0.03%	0.02%	0.75%
2	0.02%	0.02%	0.02%	0.02%	0.02%	0.02%	0.02%	0.02%	0.03%	0.03%	0.03%	0.02%	0.02%	0.02%	0.02%	0.02%	0.02%	0.04%	0.06%	0.06%	0.05%	0.03%	0.02%	0.02%	0.66%
3	0.03%	0.03%	0.03%	0.02%	0.03%	0.03%	0.03%	0.03%	0.04%	0.03%	0.03%	0.04%	0.03%	0.04%	0.03%	0.03%	0.03%	0.04%	0.07%	0.07%	0.06%	0.04%	0.04%	0.03%	0.88%
4	0.02%	0.02%	0.02%	0.02%	0.02%	0.02%	0.03%	0.03%	0.04%	0.04%	0.03%	0.03%	0.03%	0.03%	0.03%	0.03%	0.03%	0.03%	0.04%	0.04%	0.04%	0.03%	0.03%	0.02%	0.70%
5	0.03%	0.03%	0.03%	0.03%	0.03%	0.03%	0.03%	0.04%	0.04%	0.04%	0.05%	0.05%	0.05%	0.07%	0.07%	0.08%	0.08%	0.07%	0.07%	0.08%	0.07%	0.04%	0.03%	0.02%	1.15%
6	0.03%	0.02%	0.02%	0.02%	0.02%	0.02%	0.03%	0.03%	0.03%	0.03%	0.04%	0.04%	0.05%	0.07%	0.08%	0.08%	0.08%	0.08%	0.07%	0.08%	0.07%	0.05%	0.03%	0.03%	1.09%
7	0.03%	0.03%	0.03%	0.02%	0.03%	0.03%	0.03%	0.03%	0.03%	0.04%	0.06%	0.10%	0.14%	0.20%	0.28%	0.32%	0.29%	0.24%	0.16%	0.15%	0.13%	0.09%	0.04%	0.03%	2.51%
8	0.03%	0.03%	0.02%	0.02%	0.02%	0.02%	0.03%	0.02%	0.03%	0.03%	0.04%	0.07%	0.12%	0.19%	0.26%	0.29%	0.26%	0.17%	0.13%	0.15%	0.11%	0.07%	0.04%	0.03%	2.18%
9	0.02%	0.02%	0.02%	0.02%	0.02%	0.02%	0.02%	0.02%	0.02%	0.04%	0.09%	0.21%	0.41%	0.60%	0.74%	0.79%	0.70%	0.50%	0.40%	0.35%	0.22%	0.10%	0.04%	0.02%	5.37%
10	0.02%	0.02%	0.02%	0.02%	0.02%	0.02%	0.02%	0.02%	0.02%	0.02%	0.02%	0.03%	0.04%	0.08%	0.11%	0.11%	0.09%	0.09%	0.10%	0.08%	0.05%	0.03%	0.02%	0.02%	1.05%
11	0.03%	0.03%	0.03%	0.03%	0.02%	0.03%	0.03%	0.03%	0.03%	0.04%	0.04%	0.05%	0.04%	0.04%	0.03%	0.03%	0.04%	0.06%	0.06%	0.06%	0.04%	0.03%	0.03%	0.03%	0.87%
12	0.03%	0.03%	0.03%	0.03%	0.03%	0.03%	0.03%	0.03%	0.04%	0.04%	0.04%	0.04%	0.03%	0.03%	0.03%	0.03%	0.05%	0.13%	0.15%	0.14%	0.13%	0.10%	0.06%	0.04%	1.30%
Grand Total	1.02%	0.98%	0.98%	0.96%	1.08%	1.35%	1.87%	2.57%	3.32%	4.23%	4.94%	5.84%	7.16%	8.22%	8.95%	8.78%	7.74%	6.91%	6.53%	6.22%	4.69%	2.79%	1.68%	1.21%	100.00%

Results: B-banks

Row Labels	1	2	3	4	5	6	7	8	9	10	11	12	13	14	15	16	17	18	19	20	21	22	23	24	Grand Tot
WEEKDAYS	1.23%	1.14%	1.17%	1.14%	1.15%	1.35%	1.35%	1.71%	1.81%	2.32%	2.97%	4.63%	6.25%	7.29%	8.34%	7.88%	6.82%	5.21%	4.52%	4.06%	2.69%	1.85%	1.44%	1.40%	79.73%
1	0.29%	0.29%	0.29%	0.29%	0.29%	0.29%	0.33%	0.33%	0.30%	0.30%	0.31%	0.31%	0.31%	0.31%	0.32%	0.34%	0.31%	0.36%	0.31%	0.31%	0.31%	0.30%	0.29%	0.29%	7.38%
2	0.17%	0.17%	0.17%	0.17%	0.17%	0.21%	0.18%	0.36%	0.22%	0.35%	0.20%	0.24%	0.18%	0.20%	0.27%	0.19%	0.19%	0.18%	0.18%	0.24%	0.17%	0.17%	0.17%	0.16%	4.91%
3	0.08%	0.08%	0.08%	0.08%	0.08%	0.08%	0.11%	0.14%	0.08%	0.09%	0.10%	0.13%	0.10%	0.14%	0.09%	0.09%	0.10%	0.12%	0.11%	0.10%	0.09%	0.10%	0.10%	0.13%	2.41%
4	0.00%	0.00%	0.00%	0.00%	0.00%	0.00%	0.04%	0.01%	0.00%	0.01%	0.02%	0.02%	0.07%	0.03%	0.06%	0.04%	0.03%	0.03%	0.00%	0.01%	0.01%	0.00%	0.00%	0.01%	0.39%
5	0.04%	0.03%	0.04%	0.02%	0.02%	0.05%	0.07%	0.05%	0.10%	0.07%	0.22%	0.50%	0.68%	0.82%	1.06%	1.16%	0.99%	0.61%	0.38%	0.45%	0.26%	0.15%	0.06%	0.02%	7.84%
6	0.08%	0.03%	0.07%	0.05%	0.11%	0.08%	0.08%	0.10%	0.08%	0.18%	0.07%	0.05%	0.10%	0.08%	0.18%	0.14%	0.05%	0.08%	0.10%	0.05%	0.02%	0.03%	0.05%	0.07%	1.92%
7	0.12%	0.11%	0.10%	0.13%	0.07%	0.17%	0.13%	0.18%	0.21%	0.32%	0.41%	0.47%	0.81%	0.79%	0.87%	0.86%	0.83%	0.62%	0.44%	0.40%	0.24%	0.22%	0.15%	0.13%	8.79%
8	0.09%	0.08%	0.07%	0.06%	0.07%	0.09%	0.10%	0.15%	0.15%	0.15%	0.20%	0.33%	0.50%	0.61%	0.67%	0.66%	0.65%	0.41%	0.38%	0.34%	0.30%	0.17%	0.18%	0.12%	6.55%
9	0.13%	0.14%	0.16%	0.16%	0.16%	0.15%	0.13%	0.20%	0.37%	0.58%	1.00%	1.77%	2.81%	3.59%	3.98%	3.83%	3.19%	2.12%	2.12%	1.74%	0.95%	0.43%	0.18%	0.15%	30.07%
10	0.13%	0.12%	0.11%	0.11%	0.11%	0.11%	0.11%	0.11%	0.17%	0.19%	0.26%	0.41%	0.49%	0.48%	0.59%	0.38%	0.30%	0.35%	0.27%	0.24%	0.23%	0.14%	0.17%	0.16%	5.73%
11	0.04%	0.03%	0.03%	0.03%	0.03%	0.02%	0.02%	0.03%	0.03%	0.03%	0.10%	0.13%	0.10%	0.07%	0.14%	0.08%	0.09%	0.13%	0.03%	0.03%	0.05%	0.04%	0.04%	0.06%	1.38%
12	0.05%	0.05%	0.06%	0.04%	0.04%	0.10%	0.05%	0.05%	0.08%	0.05%	0.07%	0.26%	0.10%	0.14%	0.11%	0.11%	0.08%	0.20%	0.19%	0.16%	0.08%	0.11%	0.06%	0.12%	2.36%
WEEKENDS	0.68%	0.78%	0.55%	0.49%	0.51%	0.53%	0.49%	0.55%	0.64%	0.61%	0.71%	0.66%	1.15%	1.27%	1.52%	1.74%	1.69%	1.08%	0.98%	0.85%	0.74%	0.71%	0.73%	0.62%	20.27%
1	0.11%	0.11%	0.11%	0.12%	0.11%	0.11%	0.11%	0.11%	0.16%	0.12%	0.12%	0.12%	0.13%	0.13%	0.13%	0.13%	0.14%	0.13%	0.13%	0.13%	0.13%	0.13%	0.13%	0.13%	2.99%
2	0.09%	0.09%	0.08%	0.07%	0.08%	0.08%	0.07%	0.08%	0.08%	0.08%	0.08%	0.11%	0.08%	0.08%	0.08%	0.08%	0.10%	0.08%	0.08%	0.08%	0.08%	0.08%	0.08%	0.08%	1.94%
3	0.04%	0.04%	0.04%	0.03%	0.03%	0.04%	0.05%	0.03%	0.04%	0.04%	0.04%	0.04%	0.08%	0.08%	0.05%	0.04%	0.05%	0.07%	0.09%	0.05%	0.04%	0.05%	0.04%	0.05%	1.14%
4	0.02%	0.00%	0.00%	0.00%	0.05%	0.04%	0.00%	0.01%	0.00%	0.00%	0.00%	0.03%	0.01%	0.01%	0.03%	0.01%	0.01%	0.01%	0.01%	0.00%	0.00%	0.00%	0.00%	0.00%	0.25%
5	0.01%	0.08%	0.01%	0.01%	0.01%	0.02%	0.02%	0.02%	0.02%	0.02%	0.02%	0.02%	0.02%	0.03%	0.06%	0.07%	0.10%	0.03%	0.04%	0.03%	0.03%	0.01%	0.01%	0.01%	0.72%
6	0.05%	0.02%	0.03%	0.02%	0.03%	0.03%	0.04%	0.05%	0.03%	0.03%	0.04%	0.02%	0.03%	0.03%	0.02%	0.02%	0.11%	0.08%	0.02%	0.02%	0.02%	0.02%	0.02%	0.02%	0.77%
7	0.05%	0.07%	0.02%	0.02%	0.02%	0.02%	0.01%	0.05%	0.08%	0.05%	0.11%	0.04%	0.07%	0.06%	0.05%	0.06%	0.06%	0.05%	0.04%	0.05%	0.03%	0.09%	0.07%	0.06%	1.24%
8	0.05%	0.05%	0.05%	0.04%	0.05%	0.07%	0.06%	0.05%	0.05%	0.06%	0.10%	0.07%	0.09%	0.06%	0.04%	0.09%	0.12%	0.06%	0.12%	0.06%	0.06%	0.08%	0.13%	0.07%	1.67%
9	0.12%	0.20%	0.12%	0.05%	0.05%	0.05%	0.05%	0.05%	0.05%	0.06%	0.12%	0.09%	0.48%	0.63%	0.91%	1.10%	0.75%	0.37%	0.27%	0.23%	0.19%	0.14%	0.09%	0.10%	6.25%
10	0.04%	0.04%	0.04%	0.04%	0.04%	0.04%	0.04%	0.04%	0.04%	0.04%	0.04%	0.04%	0.07%	0.07%	0.08%	0.08%	0.09%	0.10%	0.10%	0.08%	0.06%	0.05%	0.04%	0.04%	1.36%
11	0.08%	0.07%	0.03%	0.03%	0.03%	0.03%	0.03%	0.03%	0.08%	0.04%	0.03%	0.04%	0.04%	0.03%	0.04%	0.04%	0.06%	0.04%	0.06%	0.07%	0.07%	0.03%	0.03%	0.03%	1.03%
12	0.02%	0.01%	0.03%	0.05%	0.02%	0.01%	0.02%	0.02%	0.02%	0.06%	0.02%	0.03%	0.05%	0.05%	0.05%	0.04%	0.09%	0.05%	0.04%	0.04%	0.04%	0.02%	0.11%	0.03%	0.91%
Grand Total	1.91%	1.92%	1.72%	1.63%	1.66%	1.87%	1.84%	2.27%	2.45%	2.93%	3.68%	5.29%	7.39%	8.56%	9.86%	9.62%	8.51%	6.29%	5.50%	4.91%	3.43%	2.56%	2.17%	2.02%	100.00%

Next Steps

- Perform similar methodology at regional levels
- Compare and integrate results to TOU periods based on generation analysis
- File TOU periods proposal by Sep 1st